Meter Setting Common Practice Guidelines

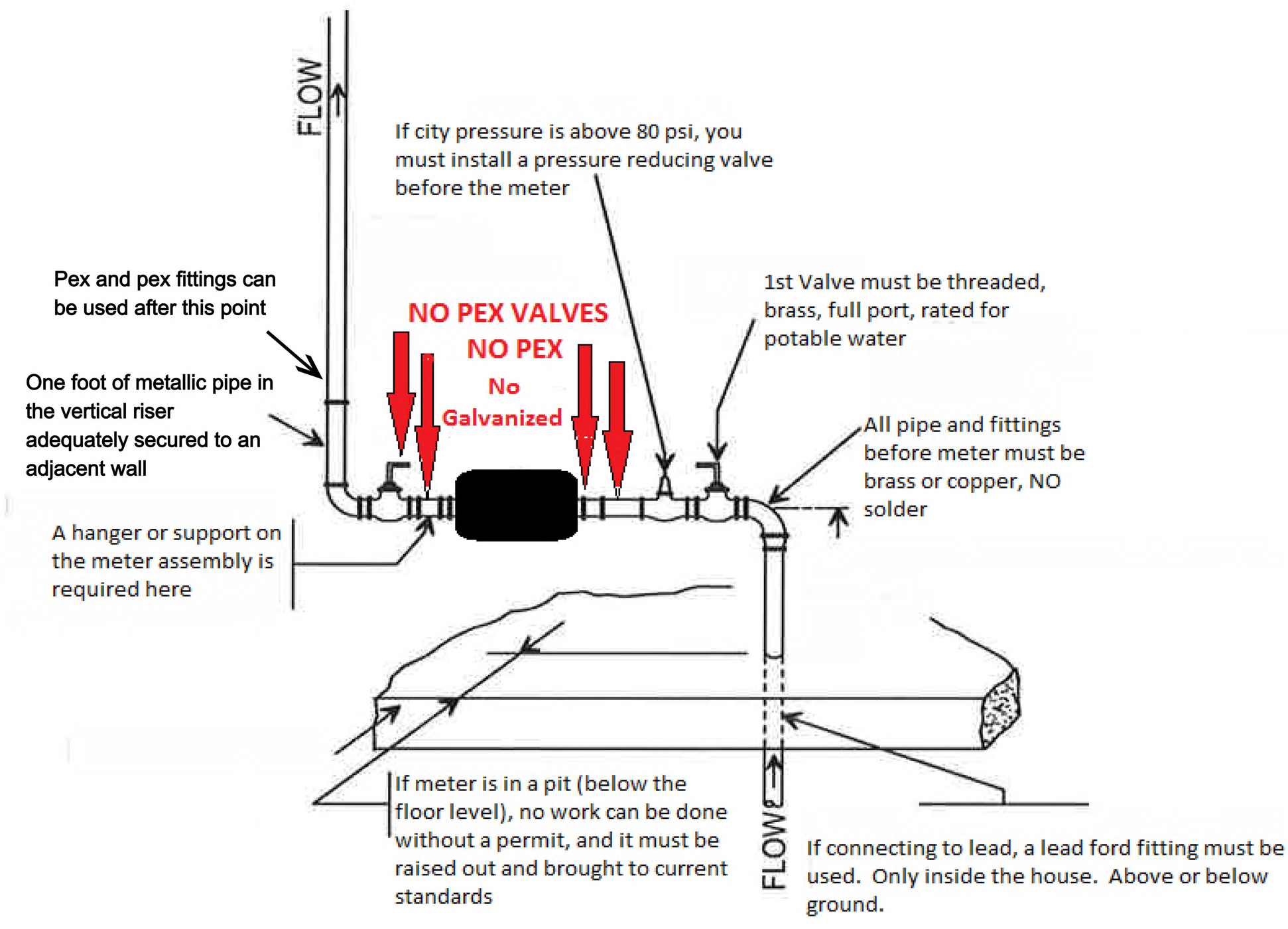

- This information is for basic guidelines. All repairs and installation must meet state plumbing codes, and local guidelines.