DETAILS

STORM SEWER MANHOLE DETAIL

WITH NEENAH R-1787 FRAME

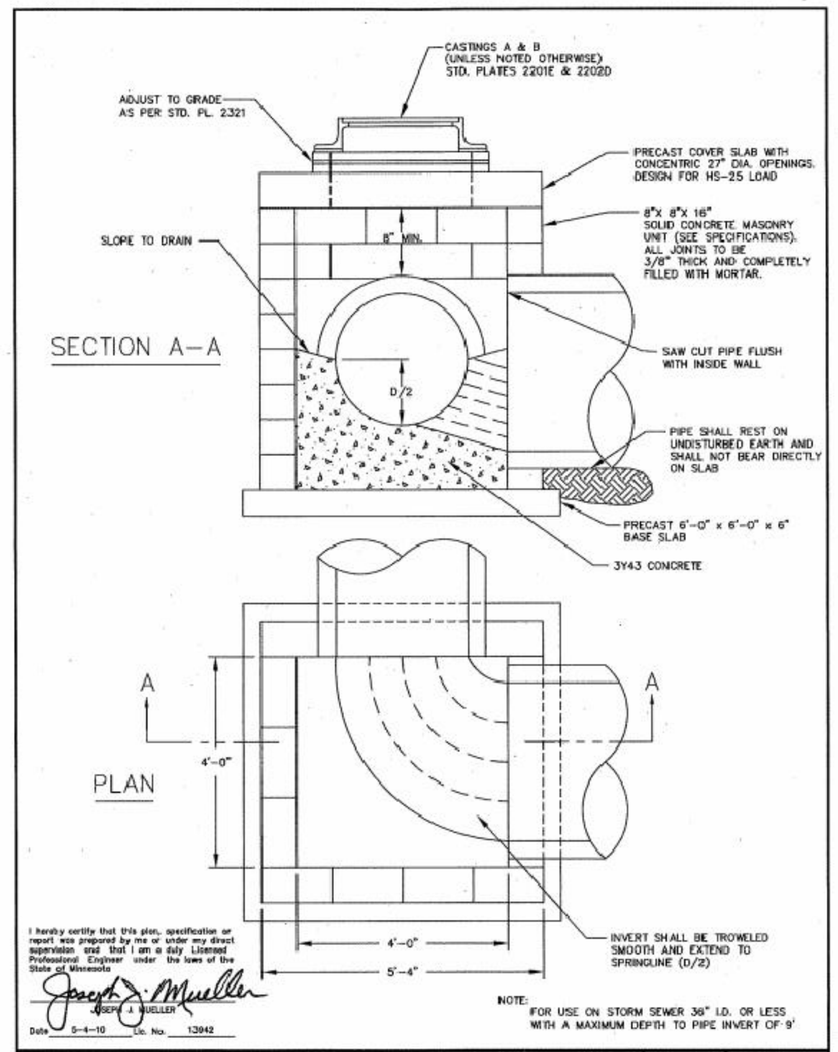

GRAPHIC SCALE

20 0 10 20 40 80

(IN FEET)
1 inch = 20 ft.

208 THRU 216 BATES AVENUE AND 716 WILSON AVENUE

Client DAYTON'S BLUFF NHS, INC. 823 EAST 7TH STREET ST PAUL, MN 55106 651-221-2507	Design by JF Drawn by JK	Original date 7-3-12 Revisions 7-9-12 7-20-12 8-1-12 8-2-12 8-17-12 8-20-12 9-12-12 10-19-12	I hereby certify that this plan, specification or report was prepared by me or under my direct supervision, and that I am a duly Registered Engineer under the laws of the State of Minnesota. Jonathan L. Faraci Date 7-3-12 Minnesota Reg. No. 16464
LAKE AND LAND SURVEYING, INC. SURVEYING/CIVIL ENGINEERING 1200 CENTRE POINTE, SUITE 275 ST PAUL, MN. 55120 PHONE (651) 776-6211	Survey book No. S.A.P. number 2012.063		Page title DETAILS Sheet number 3 of 3